NOVA LUCE

9492710

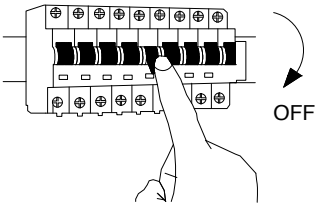

1. Turn off the general switch

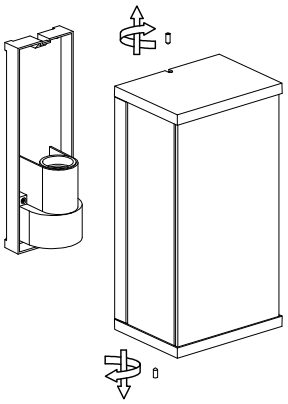

2. Untie side screws to remove the cap

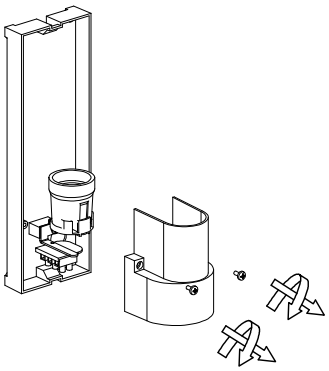

3. Untie screws to remove the rest of the parts

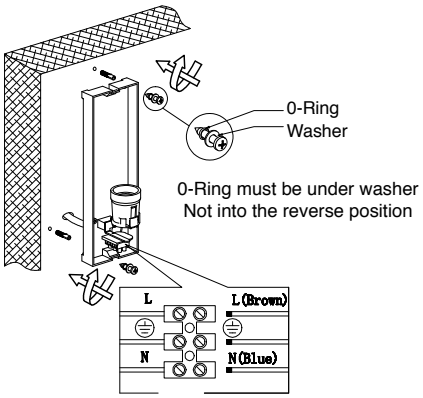

4. Connect wires & make base stable by tiding up the screws

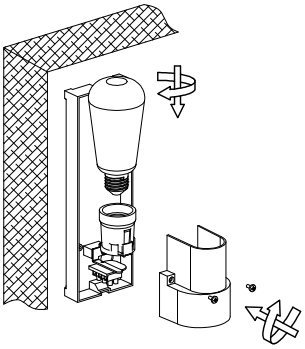

5. Insert the bulb by tiding it in place & apply screws to connect the cap

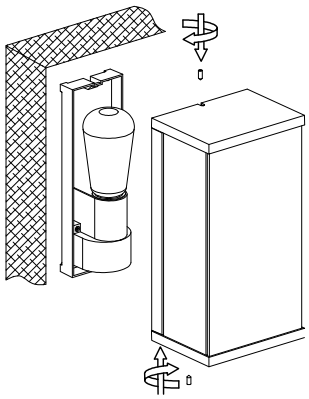

6. Apply the cap by tiding up the side screws

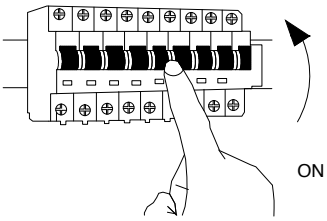
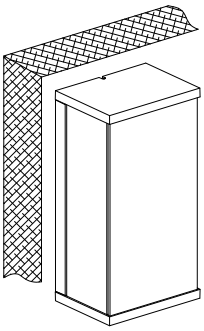
7. Turn on the general switch